MANITOWOC®

INDIGO® NXT

iT0900 Ice Cube Machine

Model:

- ☐ IRT0900A
- ☐ IDT0900A
- ☐ IYT0900A
- ☐ IRT0900W
- ☐ IDT0900W
- ☐ IYT0900W

ENERGY STAR

Indigo NXT Series iT0900
Ice Machine on a D570 Bin
*Ice machine and bin sold separately

Designed for operators who know that ice is critical to their business, the Indigo®NXT Series ice machine's preventative diagnostics continually monitor itself for reliable ice production. Improvements in cleanability and programmability make your ice machine easy to own and less expensive to operate.

- **easyTouch® Display –** New icon based touch screen takes the guess work out of owning and operating an ice machine.
- **Programmable Ice Production –** Now its super easy to program your ice machine to be off at certain times of the day to save money with fluctuating electrical rates. Also programmable by daily ice production volume and night time programming.
- **Easy to Clean Foodzone –** Hinged front door swings out for easy access. Removable water-trough, distribution tube, curtain, and sensing probes for fast and efficient cleaning. Select components made with AlphaSan® antimicrobial.
- **Intelligent Diagnostics –** provide 24 hour preventative maintenance and diagnostic feedback for trouble free operation.
- **Acoustical Ice Sensing Probe –** Unique patented technology allows for reliable operation in challenging water conditions and environments.
- **DuraTech™ Exterior –** provides superior corrosion resistant above stainless steel. Innovative clear-coat resists fingerprints and dirt making it easier to keep clean.
- **Available LuminIce II Virus and Bacteria Inhibitor–** Controls viruses, bacteria, mold and yeast within the food zone to keep the machine cleaner longer. A new sanitiation icon lets you know the operational status.
- **Active Sense –** Insures consistent ice harvest in all environmental conditions. This software and/ or hardware solution works in conjunction with the acoustical ice sensing probe improving reliability and performance.

COMMERCIAL WARRANTY

ICE MAKER	EVAPORATOR	COMPRESSOR
3 YEAR PARTS AND LABOR	5 YEAR	5 YEAR PARTS 3 YEAR LABOR

Specifications

BTU Per Hour:
18,620 (average)

20,020 (peak)

Refrigerant:
R410A CFC free

48% less Global Warming Potential

Operating Limits:

Ambient Temperature Range:
40 to 100 F (4.4 to 43.3 C)

Water Temperature Range:
40 to 90 F (4.4 to 32.2 C)

Water Pressure Ice Maker Water In:
Min. 20 psi (137.9 kPA)
Max. 80 psi (551.1 kPA)

Condenser Water Pressure:
Min. 20 psi (137.9 kPA)
Max. 276 psi (1902.95 kPA)

Ice Machine Electric

208-230/60/1
(230/50/1 also available)

Minimum circuit ampacity:
Air-cooled: 9.5 *1ph*
Water-cooled: 8.8 *1ph*

Maximum fuse size:
Air-cooled: 15 *1ph*
Water-cooled: 15 *1ph*

Ice Shape

Half Dice
⅜" x 1⅛" x ⅞"
(.95 x 2.86 x 2.22 cm)

Dice
⅞" x ⅞" x ⅞"
(2.22 x 2.22 x 2.22 cm)

Regular
1⅛" x 1⅛" x ⅞"
(2.86 x 2.86 x 2.22 cm)

CALIFORNIA LOW LEAD QUALIFIED

2110 South 26th Street
Manitowoc, WI 54220

Tel: 1.920.682.0161
Fax: 1.920.683.7589

www.manitowocice.com

WELBILT®

iT0900 Ice Cube Machine

MANITOWOC®

iT0900 Ice Cube Machine

iT0900 on D-570 Storage Bin

Ⓐ Electrical Entrance (2) Options
Ⓑ 3/8" (0.95 cm) F.P.T. Water Condenser Inlet (water-cooled units)
Ⓒ 1/2" (1.27 cm) F.P.T. Water Condenser Outlet (water-cooled units)
Ⓓ 1/2" (1.27 cm) Auxillary Base Drain Socket
Ⓔ 3/8" (0.95 cm) F.P.T. Ice Making Water Inlet
Ⓕ 1/2" (1.27 cm) F.P.T. Ice Making Water Drain
Ⓖ 3/4" (1.91 cm) Bin Drain

Installation Note
Minimum installation clearance:

Top/sides: 8" (20.32 cm); Back is 5" (12.7 cm)

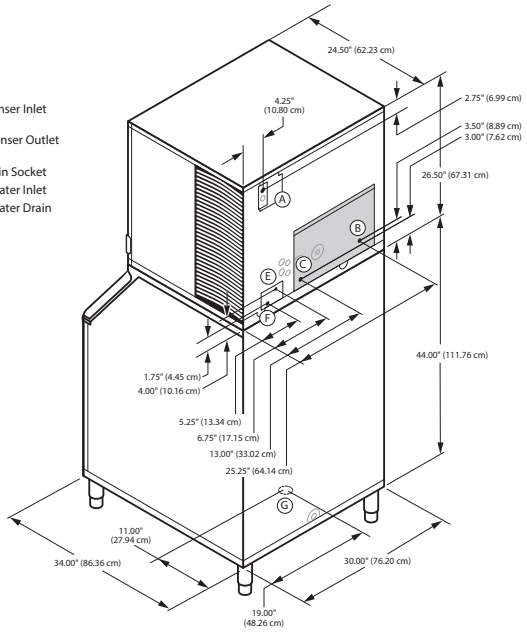

Space-Saving Designs

	iT0900 D-570	iT0900 D-970
Height	76.50" 194.30 cm	76.50" 194.30 cm
Width	30.00" 76.20 cm	48.00" 121.9 cm
Depth	34.00" 86.30 cm	34.00" 86.30 cm
Bin Storage	532 lbs. 241 kgs	882 lbs. 400 kgs

Height includes adjustable bin legs 6.00" to 8.00", (15.24 to 20.32 cm) set at 6.00" (15.24 cm).
Bin capacity is based on 90% of the volume x 33 lbs/ft3 average density of ice

Specifications

			Ice Production 24 Hours				Power Usage kWh/100 lbs.@90°Air/70°F	Water Usage/100 lbs. 45.4 kgs. of Ice		ENERGY STAR®
	Model	Ice Shape	70°Air/ 50°F Water		90°Air/ 70°F Water		1 Ph	Potable Water		
AIR-COOLED	IRT0900A	regular	797 lbs	362 kg	676 lbs	307 kg	5.01	19 Gal.	71.9 L	NA
AIR-COOLED	IDT0900A	dice	851 lbs	386 kg	695 lbs	315 kg	4.85	19 Gal.	71.9 L	★
AIR-COOLED	IYT0900A	half-dice	865 lbs	392 kg	750 lbs	340 kg	4.58	19 Gal.	71.9 L	★
WATER-COOLED	IRT0900W	regular	750 lbs	340 kg	665 lbs	302 kg	4.04	19 Gal.	71.9 L	NA
WATER-COOLED	IDT0900W	dice	780 lbs	354 kg	665 lbs	302 kg	4.02	19 Gal.	71.9 L	NA
WATER-COOLED	IYT0900W	half-dice	785 lbs	356 kg	665 lbs	302 kg	4.02	19 Gal.	71.9 L	NA

* Water-cooled Condenser Water Usage / 100 lbs. /45.4 kgs. Of Ice: 135 gal / 511 L.
* Water-cooled models are excluded from ENERGY STAR qualification.

Accessories

LuminIce® II Virus/Bacteria Inhibitor
controls viruses and bacteria inside the ice machine.

External Scoop holder
Protect the ice scoop with the NSF approved versatile scoop holder.

Arctic Pure® Water Filters
Reduces sediment and chlorine odors for better tasting ice.

iAuCS®
schedules and performs routine ice machine cleaning automatically.

©2019 Manitowoc Continuing product improvement may necessitate change of specifications without notice.

2110 South 26th Street
Manitowoc, WI 54220

Tel: 1.920.682.0161
Fax: 1.920.683.7589

www.manitowocice.com
7148C_iT0900
08/2020

WELBILT®